Fixed Compact CMOS Camera Module

1. Features

▷Output formats : CCIR656, 8bit YCbCr422, 8bit RGB Bayer, RGB565, RGB444, 8bit Mono.
▷Image processing on chip : lens shading compensation, gamma correction, defect correction, low pass filter, color interpolation, edge enhancement, color correction, brightness, contrast, saturation, auto black level compensation, auto white balance, auto exposure control and back light compensation.
▷Max. 30 frames/sec progressive scan @ 24 MHz master clock for VGA.
▷Frame size, window size and position can be programmed through a 2-wire serial interface bus.
▷VGA / QVGA / QQVGA / CIF / QCIF Scaling.
▷Horizontal / Vertical mirroring.
▷50Hz, 60Hz flicker automatic cancellation.
▷Soft reset.
▷High Image Quality and High low light performance.
▷Large angle response.
▷Support Chip scale package.

2. Basic Specification

Item	Parameter	Value
Image Sensor	Type	1 / 6.2 inch CMOS Image sensor
	Effective Image Area	2.361 (mm) x 1.785(mm)
	Effective Pixel Array	640(H) X 480(V)
Power	I/O Digital	2.8V
	Core Digital	1.5V
	Analog	2.8V
Output Format		CCIR656, 8bit YCbCr422, 8bit RGB Bayer, RGB565, RGB444, 8bit Mono
Frame Rate		Variable up to 30fps
Module size	Dimension	[6.5mm X 6.5mm x 3.78mm] (Camera Part Only)
Lens Unit	Construction	2P
	Field of view	59.6˚
Connector	KYOCERA	14-5602-024-000-829

3. Outer Dimension

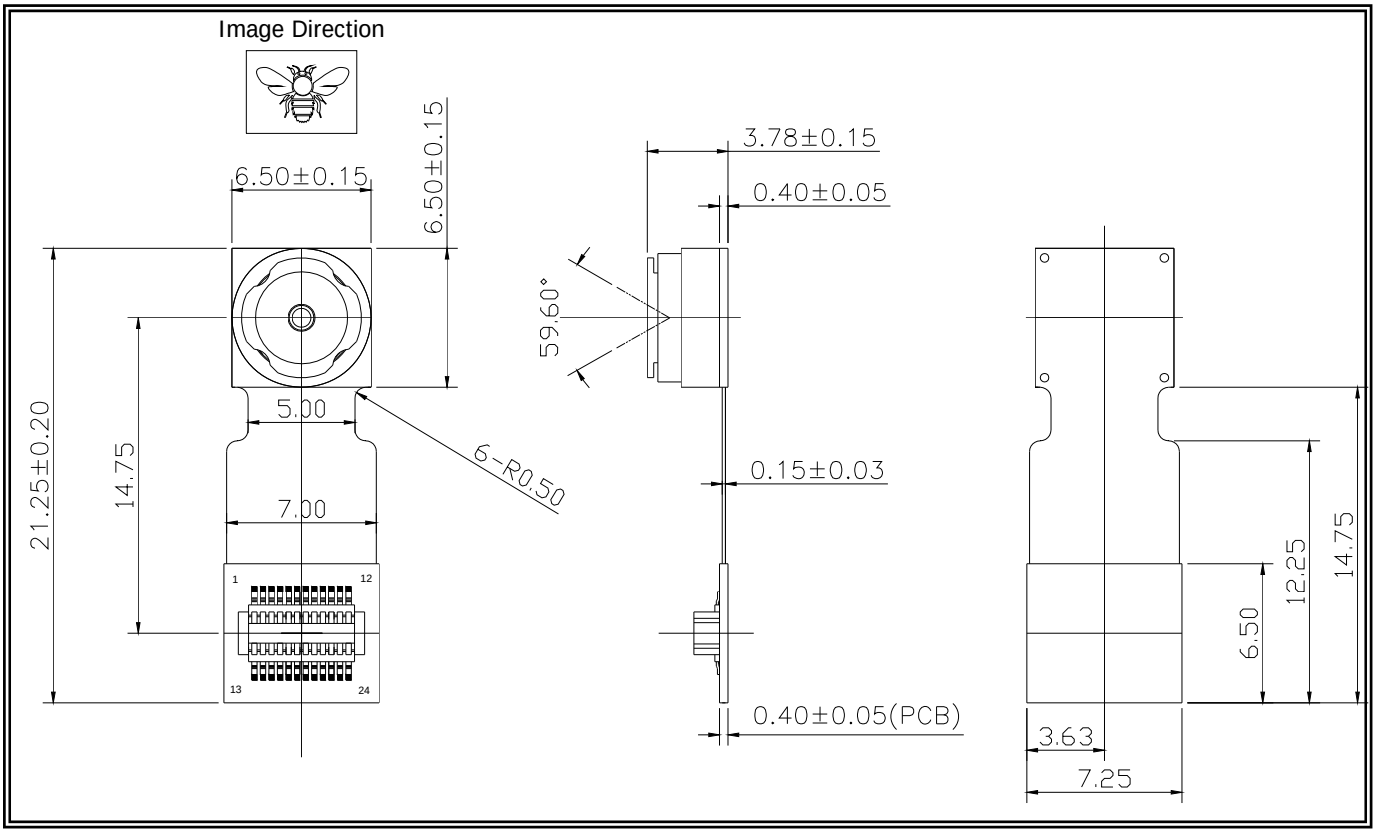

4. Pin Description

Description	Name	I/O	No.	No.	Name	I/O	Description
Analog Ground	AGND	P	1	13	AGND	P	Analog Ground
Master Clock In	MCLK	I	2	14	RSTB	I	Reset
Digital Power (1.5V)	DVDD	P	3	15	NC		
Indicates Active Pixel	HSYNC	O	4	16	D7	O	Data Out 7
Standby	STDBY	I	5	17	D6	O	Data Out 6
Analog Power (2.8V)	AVDD	P	6	18	D5	O	Data Out 5
I2C Serial Clock	SCL	I	7	19	D4	O	Data Out 4
I2C Serial Data	SDA	B	8	20	D3	O	Data Out 3
Indicates Active Frame	VSYNC	O	9	21	D2	O	Data Out 2
Digital Power (2.8V)	HVDD	P	10	22	D1	O	Data Out 1
Pixel Clock Output	PCLK	O	11	23	D0	O	Data Out 1
Digital Ground	DGND	P	12	24	DGND	P	Digital Ground